hansgrohe

Raindance S
Handshower 100 3-Jet, 2.5 GPM
Finishes : **polished nickel** Part no. : **28504831**

Description

Features

- 65 no-clog spray channels
- Spray modes: RainAir, BalanceAir, Whirl
- Flow: 2.5 GPM (9.5 L/Min)

Item details

List Price	$ 226.00

Technology

Air Power

Quick Clean

Design awards

reddot design award

Compliance

UPC

MAP

Product image

Scale drawing

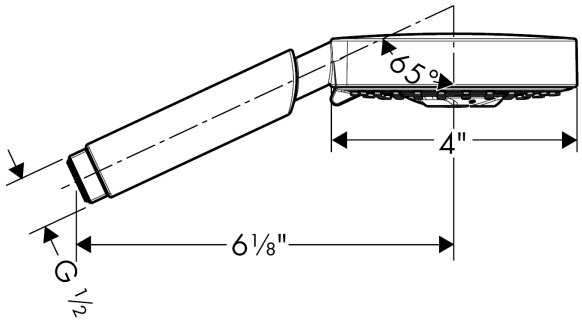

Raindance S
Handshower 100 3-Jet, 2.5 GPM
Finishes : **polished nickel** Part no. : **28504831**

Exploded drawing

Year of production: **>05/10**

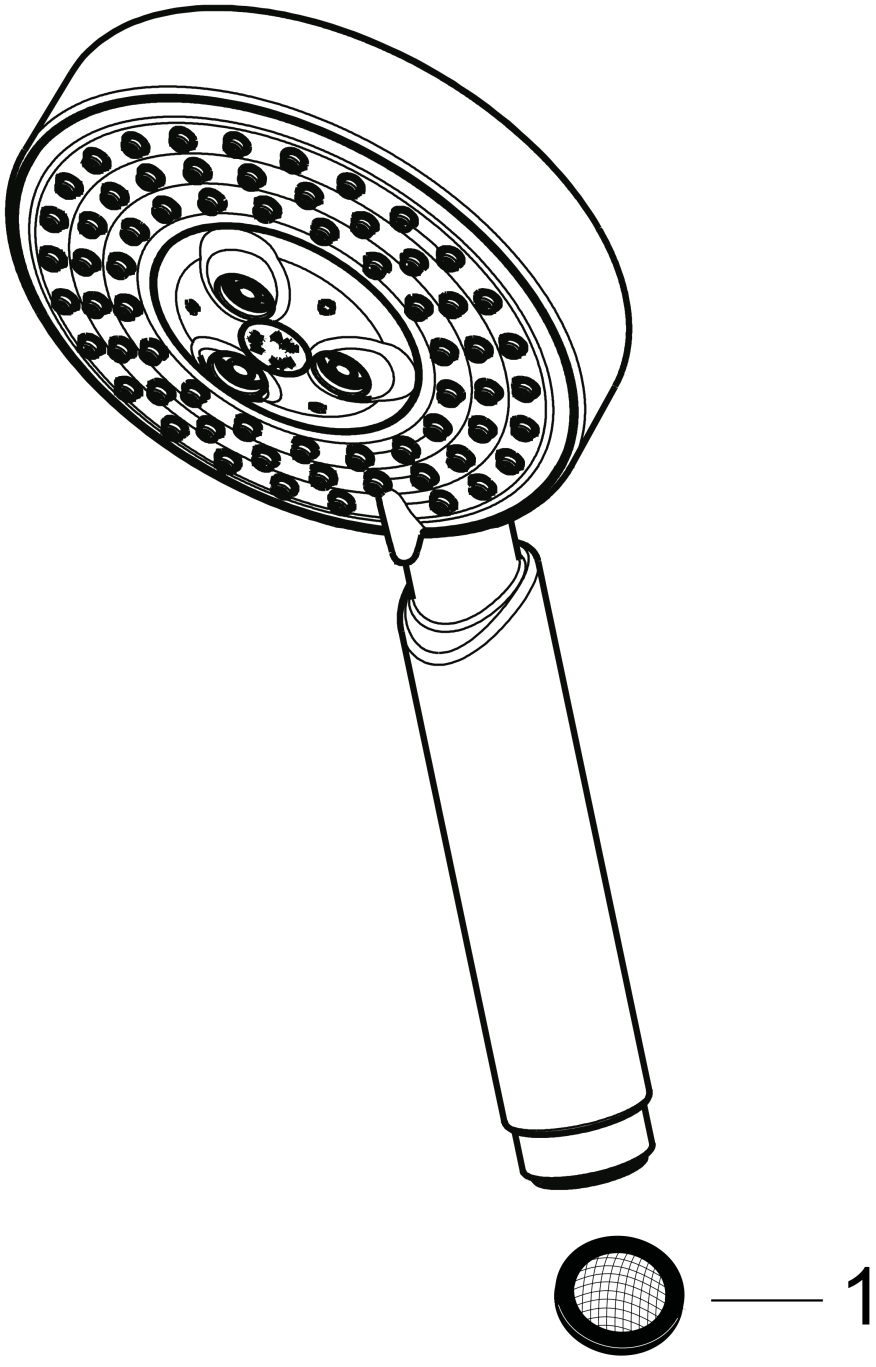

Raindance S
Handshower 100 3-Jet, 2.5 GPM
Finishes : **polished nickel** Part no. : **28504831**

Spare parts list

Year of production: **>05/10**

Pos.	Description	Part no.	Price	PU
1	filter packing	94246000	-	1